Lava 24” Double Towel Bar
Installation Guide

Code: V67183, V67184, V67185, V67186, V67188, V67189

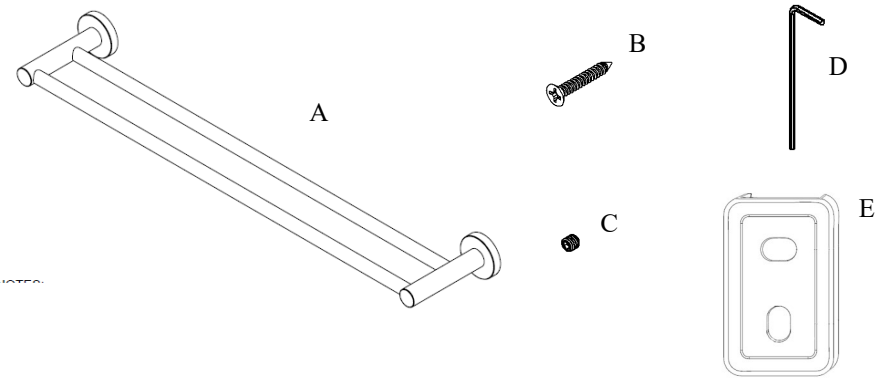

Parts Included	QTY
A - Double Towel Bar	1
B - Screw	4
C - Set Screw	2
D - Allen Key	1
E - Bracket	2

Model #	Description	Finish	Weight (lb)	WxHxD (mm)	WxHxD (Inches)	Metal Type
V67183	Lava 24” Double Towel Bar	Chrome	1.1	639 x 52 x 118	25.2 x 2 x 4.6	Brass
V67184	Lava 24” Double Towel Bar	Brushed Nickel	1.1	639 x 52 x 118	25.2 x 2 x 4.6	Brass
V67185	Lava 24” Double Towel Bar	Matte Black	1.1	639 x 52 x 118	25.2 x 2 x 4.6	Brass
V67186	Lava 24” Double Towel Bar	Polished Nickel	1.1	639 x 52 x 118	25.2 x 2 x 4.6	Brass
V67188	Lava 24” Double Towel Bar	PVD Brushed Gold	1.1	639 x 52 x 118	25.2 x 2 x 4.6	Brass
V67189	Lava 24” Double Towel Bar	PVD Brushed Bronze	1.1	639 x 52 x 118	25.2 x 2 x 4.6	Brass

Warranty: Limited Lifetime

Care & Maintenance: A periodic wash using warm water and a soft cloth will retain the high quality finish of your ico product for many years to come. ON NO ACCOUNT should any household bleaches, detergents, abrasive polishes, steel wool or other cleaning agents be used on this item.

