Summit 24” Double Towel Bar
Installation Guide

Code: V63182, V63183, V63184, V63185, V63186, V63188, V63189

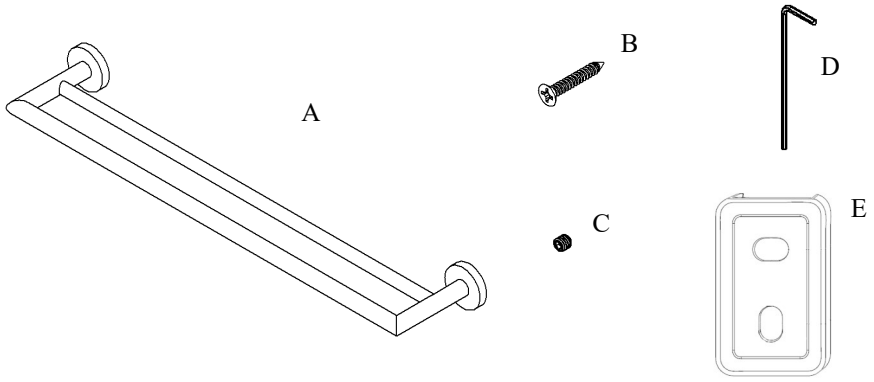

Parts Included	QTY
A - Double Towel Bar	1
B - Screw	4
C - Set Screw	2
D - Allen Key	1
E - Bracket	2

Model #	Description	Finish	Weight (lb)	WxHxD (mm)	WxHxD (Inches)	Metal Type
V63182	Summit 24” Double Towel Bar	Matte White	1.144	613 x 52 x 118	24.1 x 2 x 4.6	Brass
V63183	Summit 24” Double Towel Bar	Chrome	1.144	613 x 52 x 118	24.1 x 2 x 4.6	Brass
V63184	Summit 24” Double Towel Bar	Brushed Nickel	1.144	613 x 52 x 118	24.1 x 2 x 4.6	Brass
V63185	Summit 24” Double Towel Bar	Matte Black	1.144	613 x 52 x 118	24.1 x 2 x 4.6	Brass
V63186	Summit 24” Double Towel Bar	Polished Nickel	1.144	613 x 52 x 118	24.1 x 2 x 4.6	Brass
V63188	Summit 24” Double Towel Bar	Brushed Gold	1.144	613 x 52 x 118	24.1 x 2 x 4.6	Brass
V63189	Summit 24” Double Towel Bar	Brushed Bronze	1.144	613 x 52 x 118	24.1 x 2 x 4.6	Brass

Warranty: Limited Lifetime

Care & Maintenance: A periodic wash using warm water and a soft cloth will retain the high quality finish of your ico product for many years to come. ON NO ACCOUNT should any household bleaches, detergents, abrasive polishes, steel wool or other cleaning agents be used on this item.

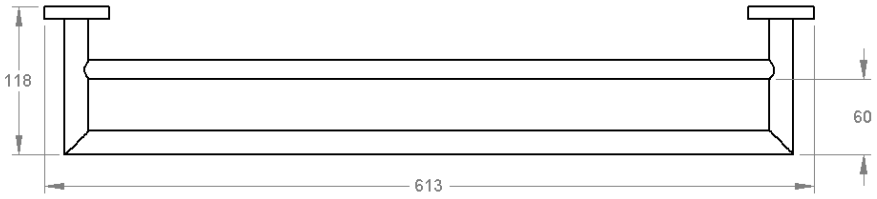



877 757 8930
cs@icobath.com | www.icobath.com