Crater Double Towel Hook
Installation Guide

Code: V62223, V62224, V62225, V62226, V62228, V62229

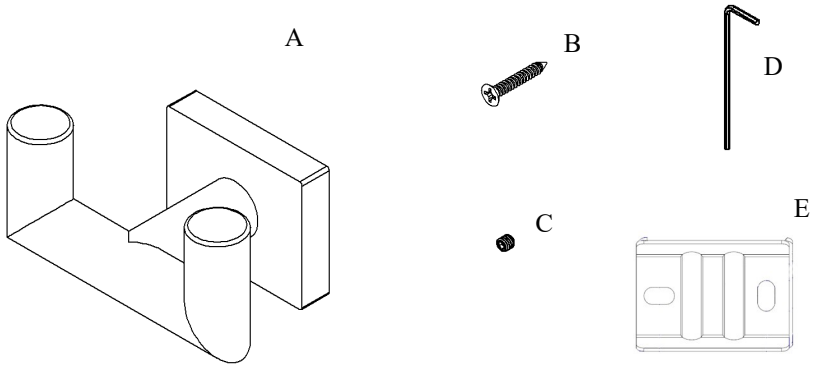

Parts Included	QTY
A - Double Towel Hook	1
B - Screw	2
C - Set Screw	1
D - Allen Key	1
E - Bracket	1

Model #	Description	Finish	Weight (lb)	WxHxD (mm)	WxHxD (Inches)	Metal Type
V62223	Crater Double Towel Hook	Chrome	0.45	91 x 58 x 64	$3^{37}/_{64}$ x $^{29}/_{32}$ x $2^{33}/_{64}$	Brass
V62224	Crater Double Towel Hook	Brushed Nickel	0.45	91 x 58 x 64	$3^{37}/_{64}$ x $^{29}/_{32}$ x $2^{33}/_{64}$	Brass
V62225	Crater Double Towel Hook	Matte Black	0.45	91 x 58 x 64	$3^{37}/_{64}$ x $^{29}/_{32}$ x $2^{33}/_{64}$	Brass
V62226	Crater Double Towel Hook	Polished Nickel	0.45	91 x 58 x 64	$3^{37}/_{64}$ x $^{29}/_{32}$ x $2^{33}/_{64}$	Brass
V62228	Crater Double Towel Hook	Brushed Gold	0.45	91 x 58 x 64	$3^{37}/_{64}$ x $^{29}/_{32}$ x $2^{33}/_{64}$	Brass
V62229	Crater Double Towel Hook	Brushed Bronze	0.45	91 x 58 x 64	$3^{37}/_{64}$ x $^{29}/_{32}$ x $2^{33}/_{64}$	Brass

Warranty: Limited Lifetime

Care & Maintenance: A periodic wash using warm water and a soft cloth will retain the high quality finish of your ico product for many years to come. ON NO ACCOUNT should any household bleaches, detergents, abrasive polishes, steel wool or other cleaning agents be used on this item.

