Crater 24" Double Towel Bar
Installation Guide

Code: V62183, V62184, V62185, V62186, V62188, V62189

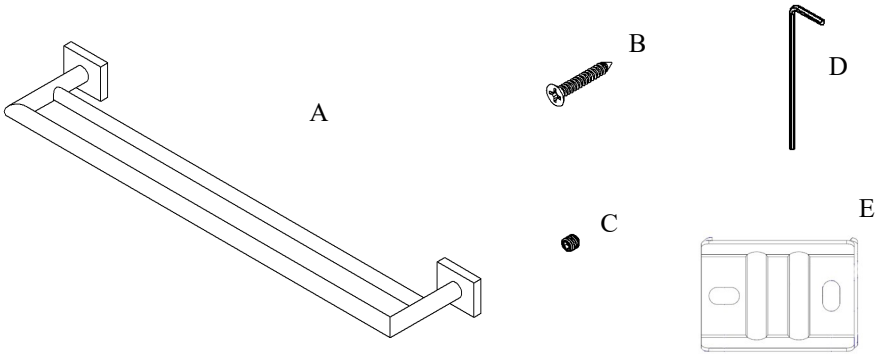

Parts Included	QTY
A - Towel Bar	1
B - Screw	4
C - Set Screw	2
D - Allen Key	1
E - Bracket	2

Model #	Description	Finish	Weight (lb)	WxHxD (mm)	WxHxD (Inches)	Metal Type
V62183	Crater 24" Double Towel Bar	Chrome	1.23	616 x 43 x 119	24.25 x 1.75 x 4.75	Brass
V62184	Crater 24" Double Towel Bar	Brushed Nickel	1.23	616 x 43 x 119	24.25 x 1.75 x 4.75	Brass
V62185	Crater 24" Double Towel Bar	Matte Black	1.23	616 x 43 x 119	24.25 x 1.75 x 4.75	Brass
V62186	Crater 24" Double Towel Bar	Polished Nickel	1.23	616 x 43 x 119	24.25 x 1.75 x 4.75	Brass
V62188	Crater 24" Double Towel Bar	Brushed Gold	1.23	616 x 43 x 119	24.25 x 1.75 x 4.75	Brass
V62189	Crater 24" Double Towel Bar	Brushed Bronze	1.23	616 x 43 x 119	24.25 x 1.75 x 4.75	Brass

Warranty: Limited Lifetime

Care & Maintenance: A periodic wash using warm water and a soft cloth will retain the high quality finish of your ico product for many years to come. ON NO ACCOUNT should any household bleaches, detergents, abrasive polishes, steel wool or other cleaning agents be used on this item.



