Crater 12" Towel Bar
Installation Guide

Code: V62133, V62134, V62135, V62136, V62138, V62139

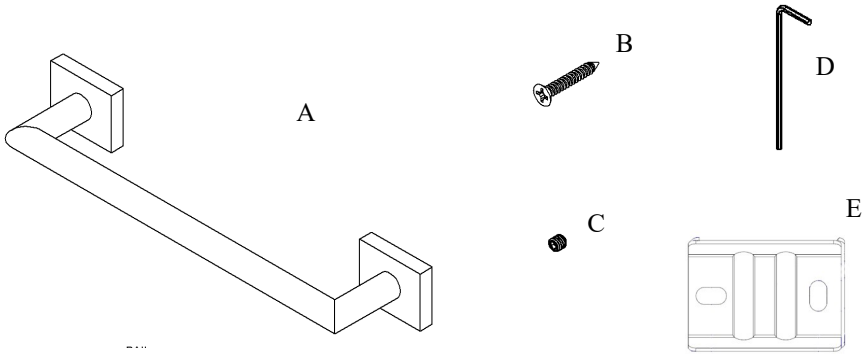

Parts Included	QTY
A - Towel Bar	1
B - Screw	4
C - Set Screw	2
D - Allen Key	1
E - Bracket	2

Model #	Description	Finish	Weight (lb)	WxHxD (mm)	WxHxD (Inches)	Metal Type
V62133	Crater 12" Towel Bar	Chrome	0.682	336 x 45 x 71	13.35 x 1.75 x 2.75	Brass
V62134	Crater 12" Towel Bar	Brushed Nickel	0.682	336 x 45 x 71	13.35 x 1.75 x 2.75	Brass
V62135	Crater 12" Towel Bar	Matte Black	0.682	336 x 45 x 71	13.35 x 1.75 x 2.75	Brass
V62136	Crater 12" Towel Bar	Polished Nickel	0.682	336 x 45 x 71	13.35 x 1.75 x 2.75	Brass
V62138	Crater 12" Towel Bar	PVD Brushed Gold	0.682	336 x 45 x 71	13.35 x 1.75 x 2.75	Brass
V62139	Crater 12" Towel Bar	PVD Brushed Bronze	0.682	336 x 45 x 71	13.35 x 1.75 x 2.75	Brass

Warranty: Limited Lifetime

Care & Maintenance: A periodic wash using warm water and a soft cloth will retain the high quality finish of your ico product for many years to come. ON NO ACCOUNT should any household bleaches, detergents, abrasive polishes, steel wool or other cleaning agents be used on this item.

