Fire Glass Shelf
Installation Guide
Code: V5763, V5764, V5765

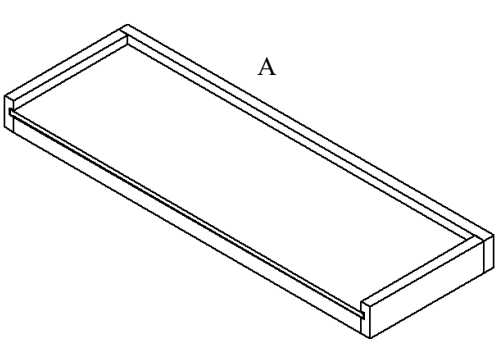



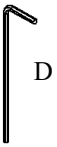



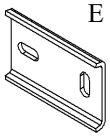

Parts Included	QTY
A - Glass Shelf	1
B - Screw	4
C - Set Screw	2
D - Allen Key	1
E - Bracket	2

Model #	Description	Finish	Weight (lb)	WxHxD (mm)	WxHxD (Inches)	Metal Type
V5763	Fire Glass Shelf	Chrome	6	400 x 30 x 135	16 x 1 x 5	Brass
V5764	Fire Glass Shelf	Brushed Nickel	6	400 x 30 x 135	16 x 1 x 5	Brass
V5765	Fire Glass Shelf	Matte Black	6	400 x 30 x 135	16 x 1 x 5	Brass

Warranty: Limited Lifetime

Care & Maintenance: A periodic wash using warm water and a soft cloth will retain the high quality finish of your ico product for many years to come. ON NO ACCOUNT should any household bleaches, detergents, abrasive polishes, steel wool or other cleaning agents be used on this item.

