Flow 24” Double Towel Bar
Installation Guide
Code: V4183, V4184, V4185

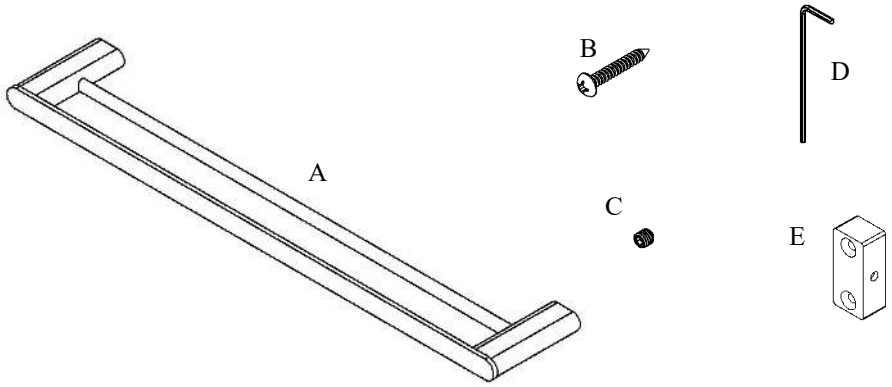

Parts Included	QTY
A - Double Towel Bar	1
B - Screw	4
C - Set Screw	2
D - Allen Key	1
E - Bracket	2

Model #	Description	Finish	Weight (lb)	WxHxD (mm)	WxHxD (Inches)	Metal Type
V4183	Flow 24” Double Towel Bar	Chrome	2.5	600 x 22 x 107	23.75 x 0.75 x 4.25	Brass
V4184	Flow 24” Double Towel Bar	Brushed Nickel	2.5	600 x 22 x 107	23.75 x 0.75 x 4.25	Brass
V4185	Flow 24” Double Towel Bar	Matte Black	2.5	600 x 22 x 107	23.75 x 0.75 x 4.25	Brass

Warranty: Limited Lifetime

Care & Maintenance: A periodic wash using warm water and a soft cloth will retain the high quality finish of your ico product for many years to come. ON NO ACCOUNT should any household bleaches, detergents, abrasive polishes, steel wool or other cleaning agents be used on this item.

