Cinder Toilet Paper Holder
Installation Guide

Code: V3013, V3014, V3015, V3010.SB, V3018

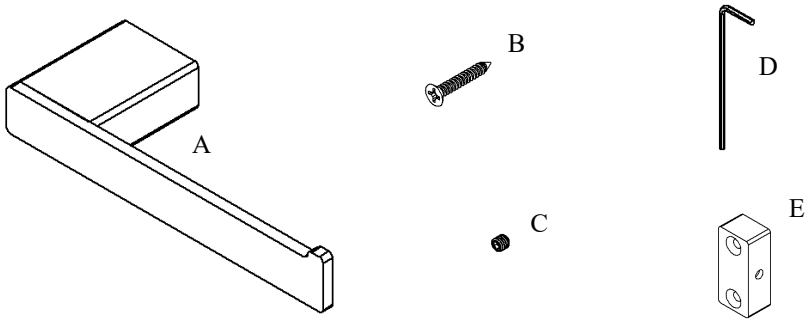

Parts Included	QTY
A - Toilet Paper Holder	1
B - Screw	2
C - Set Screw	1
D - Allen Key	1
E - Bracket	1

Model #	Description	Finish	Weight (lb)	WxHxD (mm)	WxHxD (Inches)	Metal Type
V3013	Cinder Toilet Paper Holder	Chrome	0.9	180 x 25 x 60	6.5 x 1 x 2.4	Brass
V3014	Cinder Toilet Paper Holder	Brushed Nickel	0.9	180 x 25 x 60	6.5 x 1 x 2.4	Brass
V3015	Cinder Toilet Paper Holder	Matte Black	0.9	180 x 25 x 60	6.5 x 1 x 2.4	Brass
V3010-BGL	Cinder Toilet Paper Holder	Brushed Gold	0.9	180 x 25 x 60	6.5 x 1 x 2.4	Brass
V3010-BGD	Cinder Toilet Paper Holder	Brushed Gold	0.9	180 x 25 x 60	6.5 x 1 x 2.4	Brass

Warranty: Limited Lifetime

Care & Maintenance: A periodic wash using warm water and a soft cloth will retain the high quality finish of your ico product for many years to come. ON NO ACCOUNT should any household bleaches, detergents, abrasive polishes, steel wool or other cleaning agents be used on this item.

