Erupt 24” Double Towel Bar
Installation Guide
Code: V1183, V1184, V1185

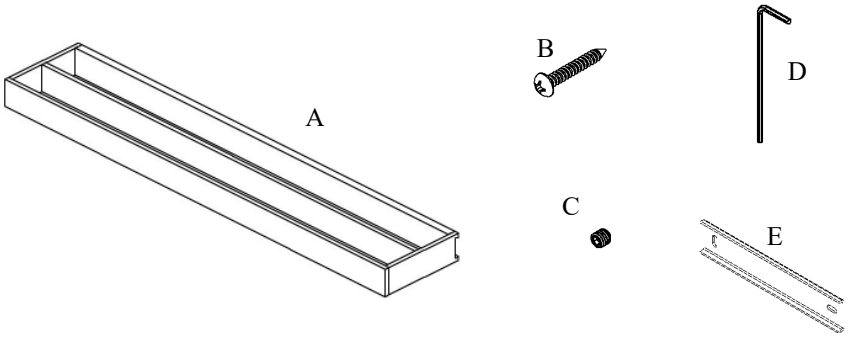

Parts Included	QTY
A - Double Towel Bar	1
B - Screw	4
C - Set Screw	1
D - Allen Key	1
E - Bracket	1

Model #	Description	Finish	Weight (lb)	WxHxD (mm)	WxHxD (Inches)	Metal Type
V1183	Erupt 24” Double Towel Bar	Chrome	7.75	600 x 35 x 115	23.5 x 1.5 x 4.5	Brass
V1184	Erupt 24” Double Towel Bar	Brushed Nickel	7.75	600 x 35 x 115	23.5 x 1.5 x 4.5	Brass
V1185	Erupt 24” Double Towel Bar	Matte Black	7.75	600 x 35 x 115	23.5 x 1.5 x 4.5	Brass

Warranty: Limited Lifetime

Care & Maintenance: A periodic wash using warm water and a soft cloth will retain the high quality finish of your ico product for many years to come. ON NO ACCOUNT should any household bleaches, detergents, abrasive polishes, steel wool or other cleaning agents be used on this item.

