Denver LED Mirrors

Technical Specifications

Code: ID1024.BB, ID1024.BG, ID1024.MB



Features:

- Acrylic diffused LED lighting
- Anodized aluminum frame in matte black, brushed gold, or brushed bronze
- CRI 90+ R9>50
- 2700K-6500K color temperature adjustment
- 10%-100% light dimmer
- Brightness and color temperature memory settings
- Heated mirror defogger
- Touch on/off
- Safety film backing
- Copper free
- IP44 rated for safe use in bathrooms
- ETL certified for North American use
- 110V plug in installation, can be hardwired
- Can be controlled with a light switch
- Lamp life : 50,000 hours

Size (WxHxD):

23 5/8" x 23 5/8" x 1 1/4
(600mm x 600mm x 31mm)

Model #	Description	Color Temperature	Lumens	Watts	Volts	Weight (lb)
ID1024.BB	Denver 24" LED Mirror - Brushed Bronze	2700K - 6500K	1900	14W	110V	9.3
ID1024.BG	Denver 24" LED Mirror - Brushed Gold	2700K - 6500K	1900	14W	110V	9.3
ID1024.MB	Denver 24" LED Mirror - Matte Black	2700K - 6500K	1900	14W	110V	9.3

Warranty: 5 Years - refer to www.icobath.com for full warranty coverage details.

Included Hardware: Screws, mounting brackets are included.

Care & Maintenance: A periodic wash using warm water and a soft cloth will retain the quality of your LED mirror for many years to come. ON NO ACCOUNT should any household bleaches, detergents, abrasive polishes, steel wool or other cleaning agents be used on this item.

Diagram and measurements:

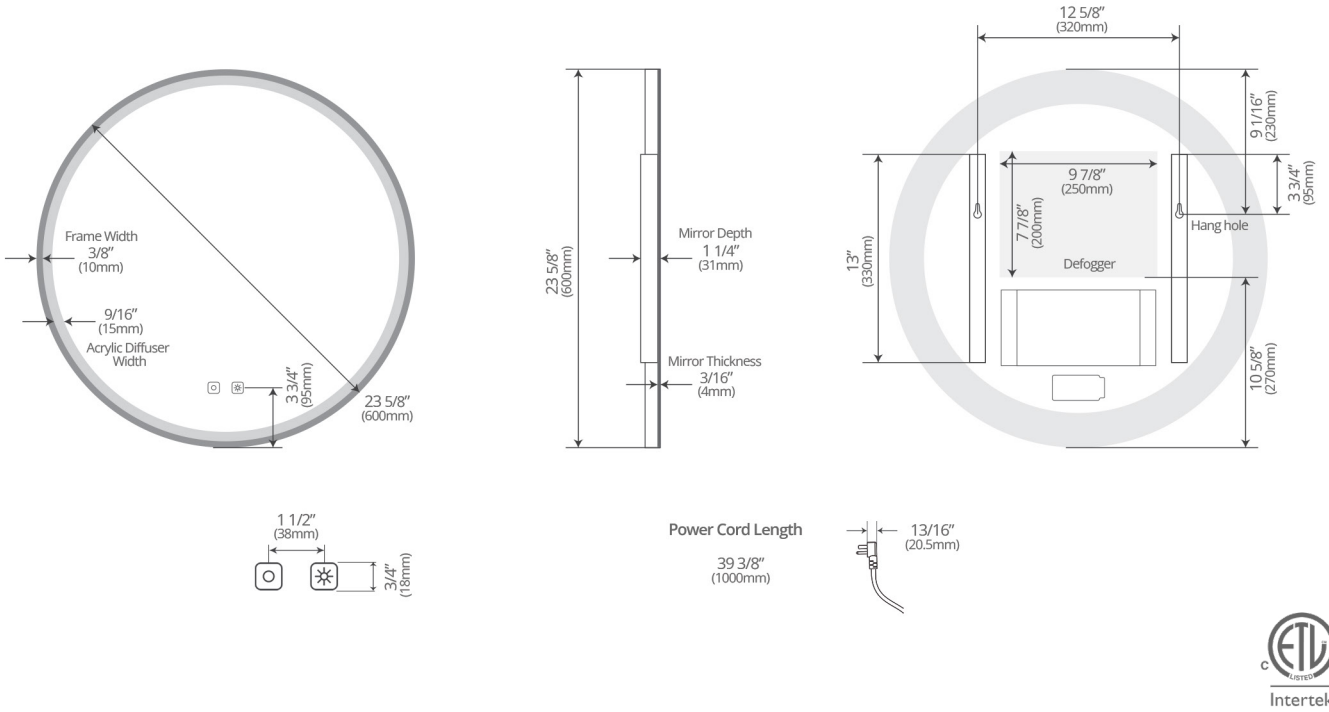

Intertek

Touch button details:









Getting Started

Before installation, check the product for any shipping damage. If you find any damage, do not install and contact your dealer or ICO.

Electrical Connections

All wiring should be done by a qualified licensed electrician

Caution	Read and follow all instructions before installing this LED mirror.
Danger	Shut off power before wiring the mirror.
Warning	Requires 120VAC 15-amp GFI protected circuit.

Ensure all wiring is in accordance with local guidelines.

IMPORTANT SAFETY INSTRUCTIONS

Warning

To reduce the risk of burns, fire, electric shock or injury to persons. Use this furnishing only for its intended use as described in these instructions. Do not use attachments not recommended by the manufacturer. Never drop or insert any object into any opening. Do not use outdoors.

GROUNDING INSTRUCTIONS

Danger

Risk of electric shock. Connect this furnishing to a properly grounded circuit only.

This product must be connected to a grounded metal, permanent wiring system, or an equipment-grounding conductor must be run with the circuit conductors and connected to the equipment-grounding terminal or lead on the product.

For an electrical hardwire option, the LED mirror must be wired to a 15-amp GFI (Ground Fault Interrupter) protected circuit when used in bathrooms and all other locations as per your respective local Electrical Code.

REQUIRED TOOLS & MATERIALS



PARTS INCLUDED



DIMENSIONS & MEASUREMENTS

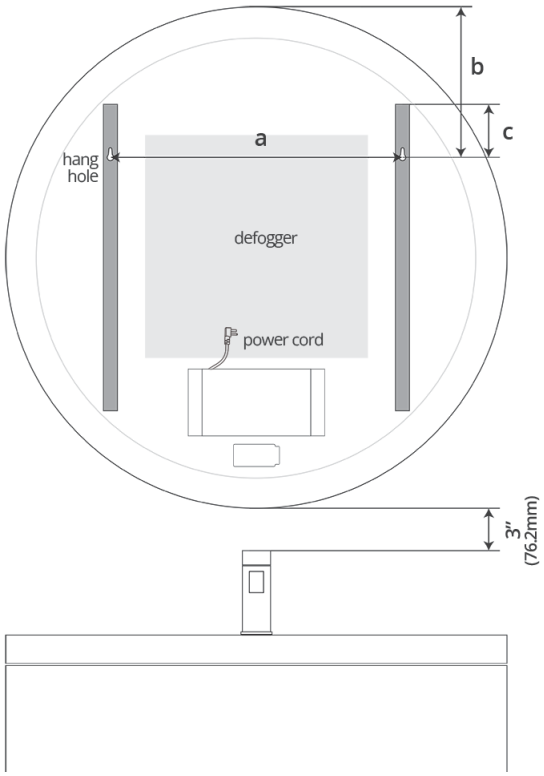

a - distance between hang holes
b - height - top of the mirror to hang hole
c - height - top of the support to hang hole

Measure and determine overall mirror dimensions as well as “a”, “b” & “c” (see diagram) before installation.

All dimensions and specifications in the table below are approximate and may vary without prior notice.

Use your actual product measurement for accuracy.

Model #	a (distance between hang holes)	b (height - top of the mirror to hang hole)	c (height - top of the support to hang hole)	Product Dimension
ID1024.BB ID1024.BG ID1024.MB	12 5/8" (320mm)	9 1/6" (230mm)	3 3/4" (95mm)	23 5/8” x 23 5/8” x 1 1/4” (600mm x 600mm x 31mm)
ID1030.BB ID1030.BG ID1030.MB	15 3/4" (400mm)	9 5/8" (245mm)	3 3/4" (95mm)	29 1/2” x 29 1/2” x 1 1/4” (750mm x 750 mm x 31 mm)
ID1036.BB ID1036.BG ID1036.MB	20 5/8" (525mm)	10 5/8" (270mm)	3 3/4" (95mm)	35 3/8” x 35 3/8” x 1 1/4” (900mm x 900 mm x 31 mm)

*Download the specific model’s tech spec sheet on our website for other measurements

Power cord length is 39 3/8” (1000mm) but do an actual measurement, especially if the power outlet or junction box is farther than 30” (762mm).

POWER OUTLET OR JUNCTION BOX LOCATION

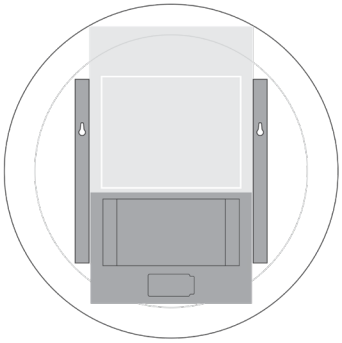

ID1024 - Denver 24”

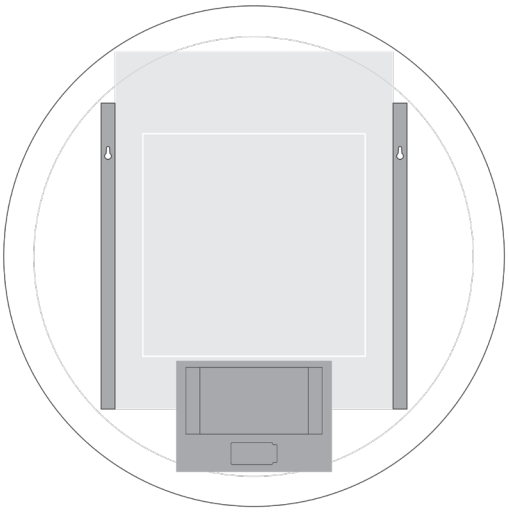

ID1036 - Denver 36”

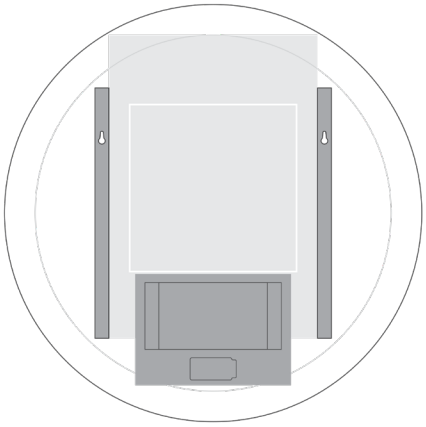

ID1030 - Denver 30”

Color Shading Guide

Ideal location of the electrical outlet or junction box.

Location not advisable! Moreover, power cord must not cross or be over any part of this shaded part.

**Diagram is for electrical outlet located behind the mirror. If electrical outlet is to the side or at the bottom/top of the mirror, always consider the length of the power cord (see previous page for measurement) and the darker shades in these diagrams where cord and/or plug must not cross over or be on top of.*

OPERATING INSTRUCTIONS

1. Unpack your mirror and set it on the floor – ensure you lay out floor protection – cardboard, towel etc.

2. Measure mirror dimensions before proceeding with installation.

   * All dimensions in the Technical Specifications Sheet are approximate and may change without notice.

3. Mark the position of the mirror on the wall.

   Keep at least 3" distance between the bottom end of the mirror and the top of the faucet (if installed over a sink or vanity top).

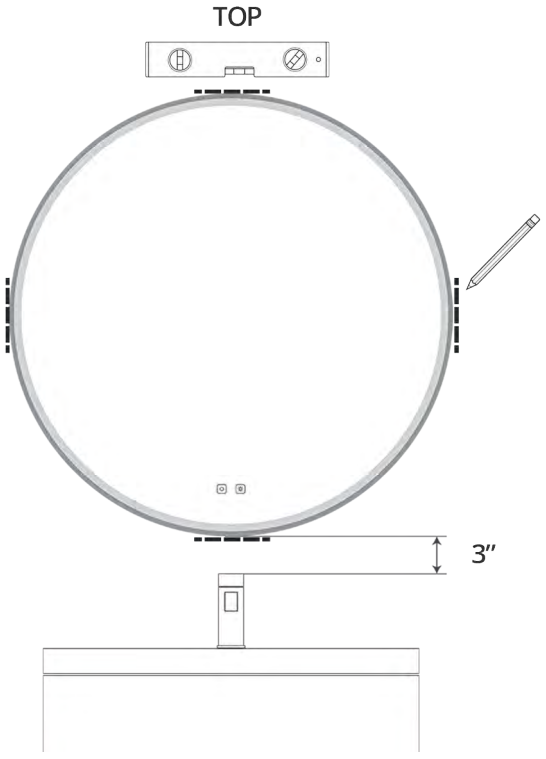

3. Measure the center of the holes (A) and mark the drilling locations. Ensure the mirror is level (B).

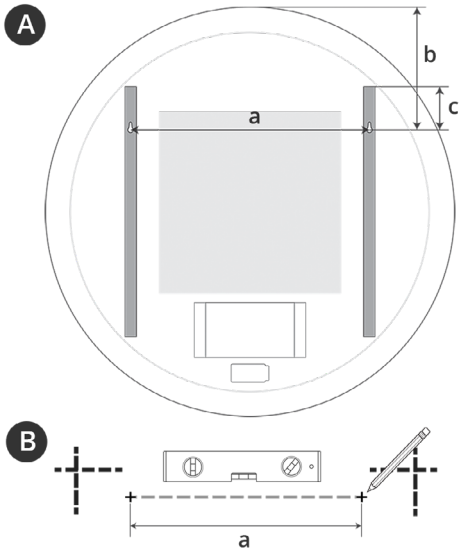

5. Predrill and install drywall anchors.
   Screw the supplied screws into the anchors. Leave a gap of 6-8mm between the head of the screw and the wall.

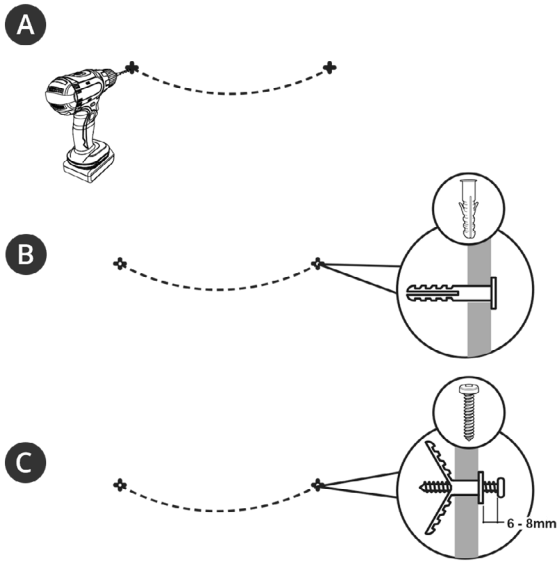

6 For plugin installation - plug in the mirror to the grounded outlet.

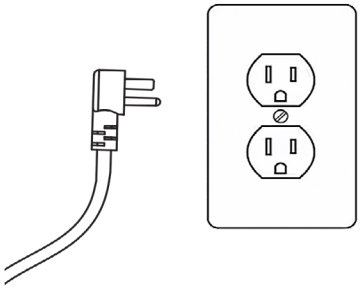

For hardwired installation - cut off the power plug , then use the wire connector to connect to external power supply.

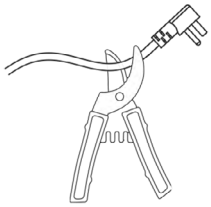

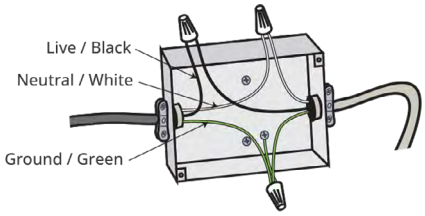

*Junction box is not included

Make connection	Neutral to white Live to black Ground to green

Both installation options can be connected and controlled with a light switch.

7 Place the mirror against the wall (and the screws) and slide down as shown in B.

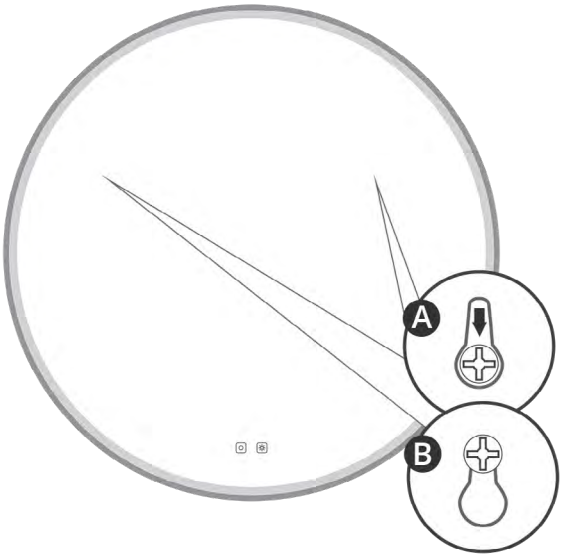

OPERATING INSTRUCTIONS

Touch to turn light and defogger on/off.
(The heating pad/defogger auto turns off after one hour).

Press and hold to adjust color temperature.

Press and hold to adjust the brightness.
Touch will increase/decrease (with 4 preset brightness levels).

This LED mirrror has brightness and color temperature memory settings capability. Turning off (whether through touch or light switch) saves the last settings used.